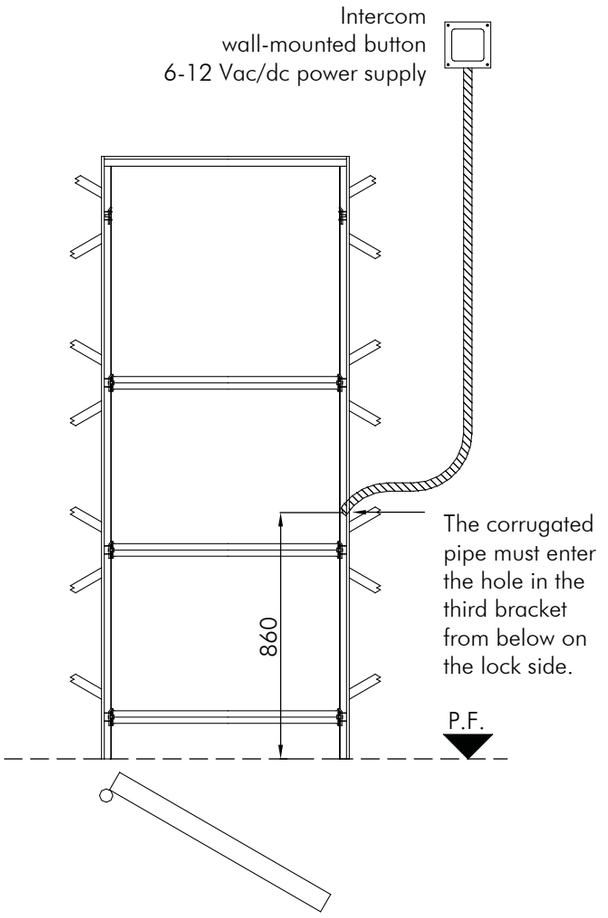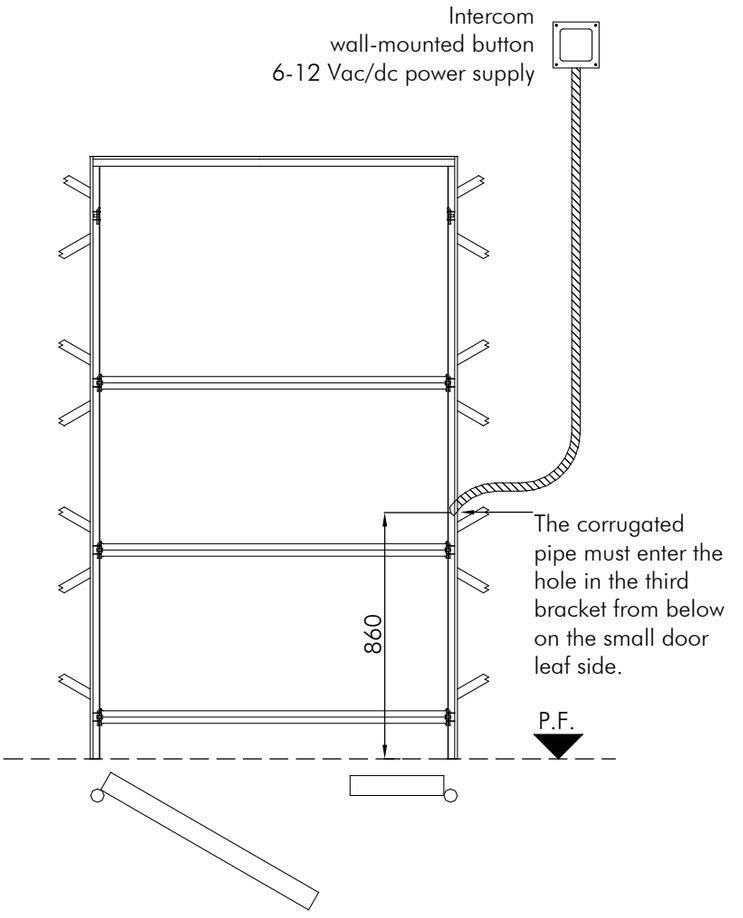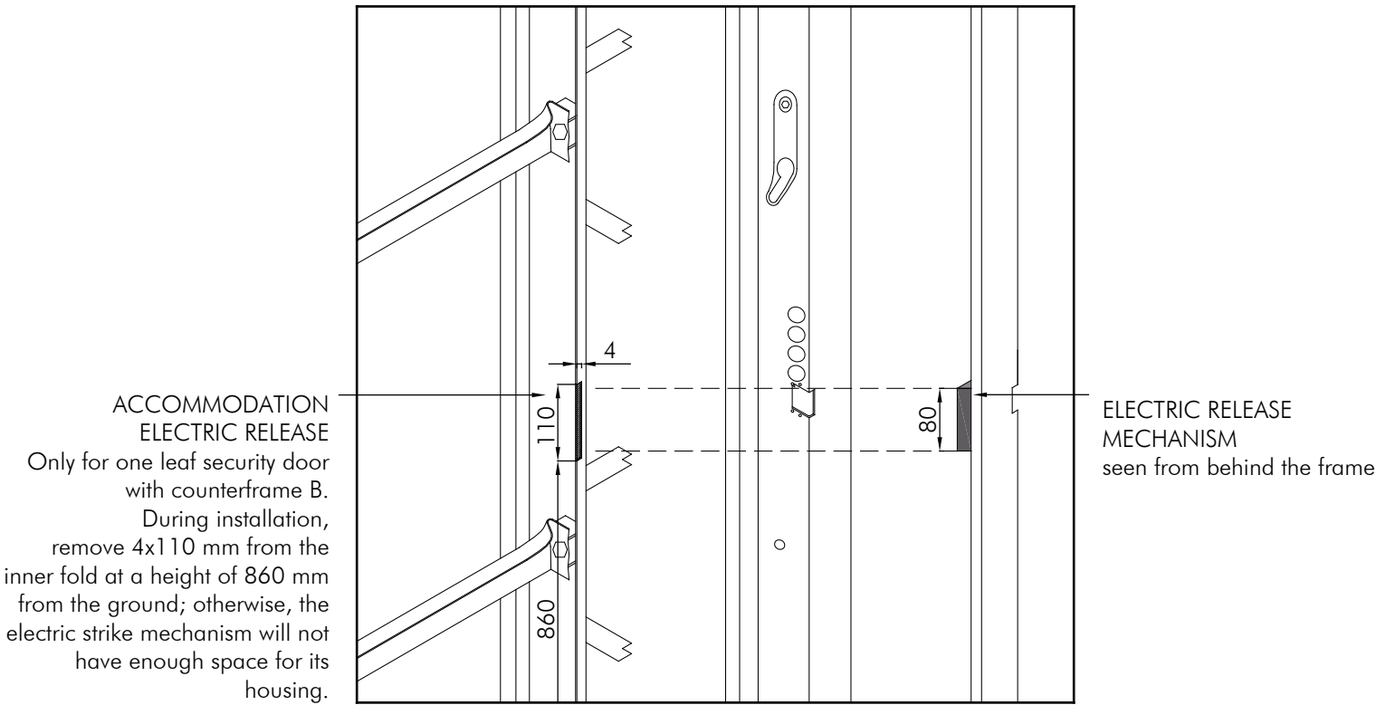Instructions Installation of electric release